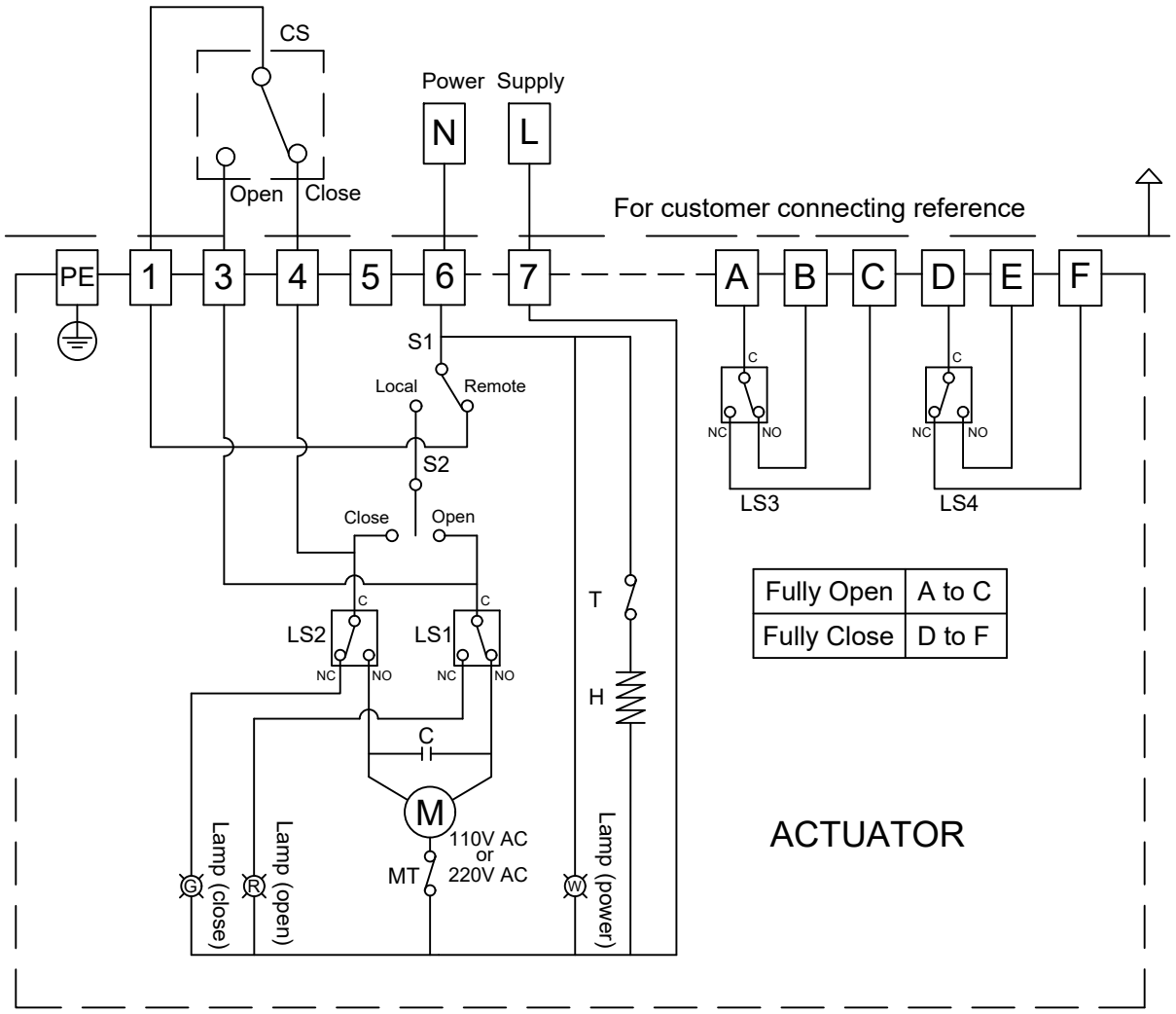

Rev	Description	Date	APVD
03			
02			
01			
00			

Revision History

Power Supply: 110-120V AC or 220-240V AC

CS: Control Switch
S1: Local/Remote Selector Switch
S2: OPEN/CLOSE Selector Switch
PE: Protective Earth
H: Heater
T: Thermostat
MT: Motor Thermostat
C: Capacitor
M: Motor
LS1: Limit Switch for OPEN (5A/250V AC)
LS2: Limit Switch for CLOSE (5A/250V AC)
LS3: SPDT Auxiliary Limit Switch (5A/250V AC)
LS4: SPDT Auxiliary Limit Switch (5A/250V AC)

Notes:
1) "N" connects to 6, "L" connects to 7.
2) Select "Remote" Mode : 1 connects to 3 for "OPEN".
3) Select "Remote" Mode : 1 connects to 4 for "CLOSE".
4) Select "Local" Mode : Controlled by S2.
5) Wiring is shown with Actuator Fully Closed.
6) **Applicable to Actuator models iVQ-E to R.**

Innovative Actuation Incorporated
1-215 Traders Blvd. Mississauga, Ontario Canada www.ivact.com

DESCRIPTION:
110/220V AC ON/OFF with Heater, Thermostat, Auxiliary Switches and Local Control Unit 30% Duty

WIRING DIAGRAM CODE: QP
DATE: APR. 21/2018

WIRING DIAGRAM NO.:
Q-2AL21NNN-2